Karlsruhe Institute of Technology

Institute for Applied Computer Science

A Structure from Motion Approach for the Analysis of Adhesions in Rotating Vessels

3DV 2014, Int. Conf. on 3D Vision, The University of Tokyo, Japan, 8-11th December 2014

Patrick Waibel, Jörg Matthes, Lutz Gröll, Hubert B. Keller

PROBLEM

Adhesions inside rotating vessels such as rotary kilns can cause:

- Process downtime
- Repair costs
- Decreasing product quality

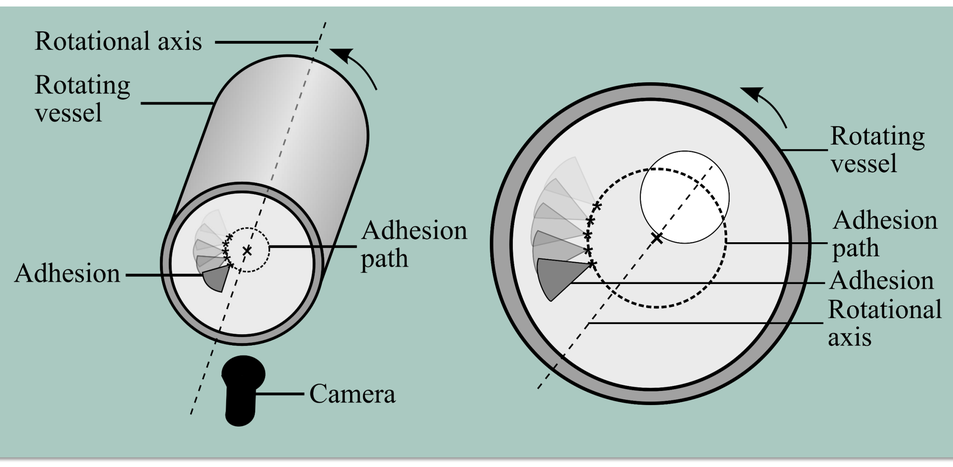

Early detection of critical adhesions and directed countermeasures could prevent these problems

But: On-line detection and analysis of adhesion not yet possible

➡ Camera-based analysis of rotating vessels

IDEA

Camera position shifted to rotational axis of vessel offers possibility to deduce on adhesion depth and height:

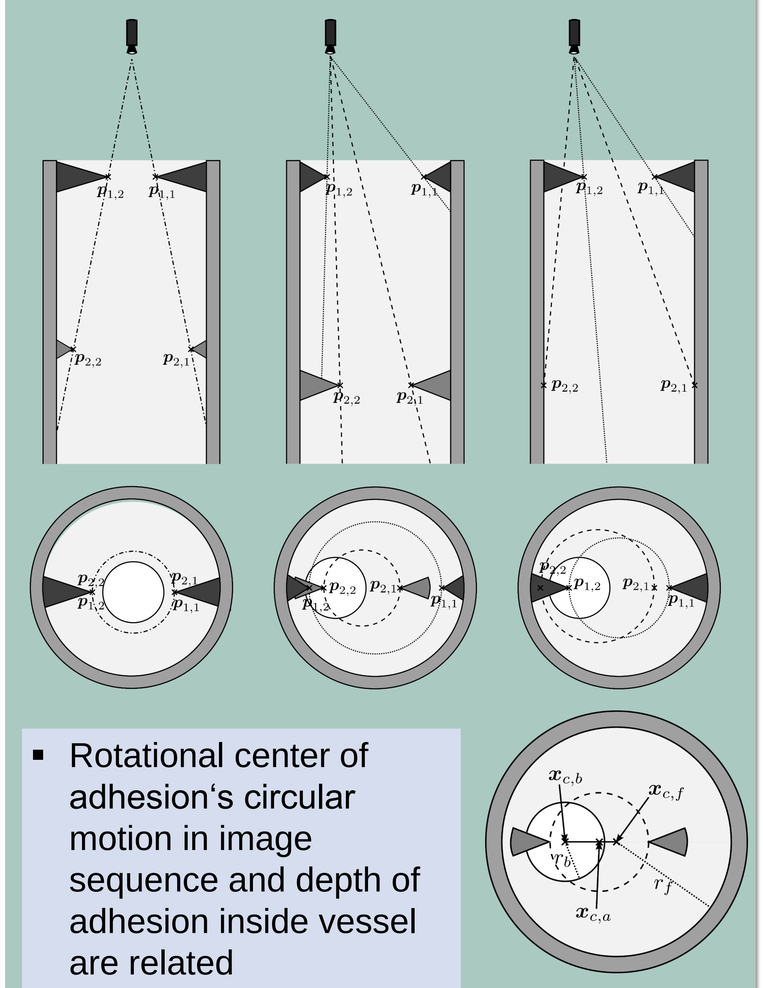

- Rotational center of adhesion's circular motion in image sequence and depth of adhesion inside vessel are related
- Radius of adhesion's circular motion and the height of the adhesion are connected

$x_{c,a}$: image position of rot. center adhesion
$x_{c,b}$: image position of rot. center vessel back
$x_{c,f}$: image position of rot. center vessel front

METHOD

Mathematical relationships between image data and 3D-real-world information

1. Rotational Center → Depth:

$$z = \frac{l}{\frac{r_f}{r_b} - 1}\left(\frac{r_f}{\left(\frac{x_{c,a}-x_{c,b}}{x_{c,f}-x_{c,b}}\right)(r_f - r_b) + r_b} - 1\right)$$

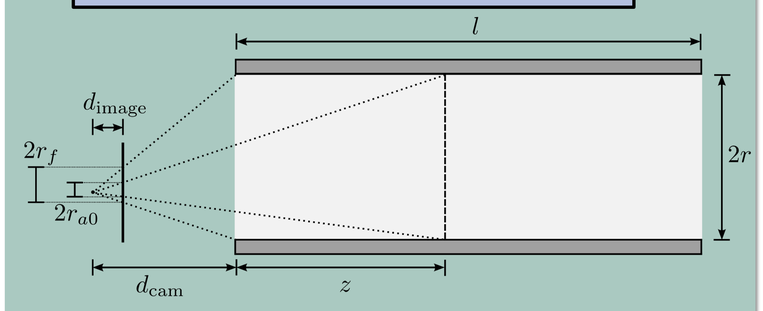

2. Radius → Height:

$$h_a(x_{c,a}, r_a) = r\left(1 - \frac{r_a}{\left(\frac{x_{c,a}-x_{c,b}}{x_{c,f}-x_{c,b}}\right)(r_f - r_b) + r_b}\right)$$

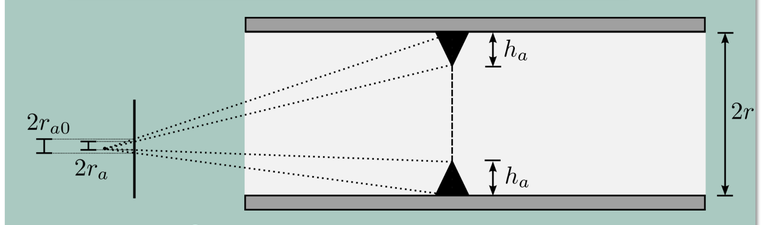

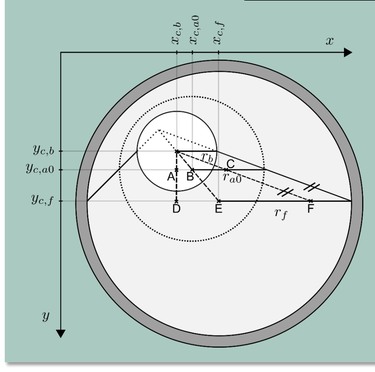

r: vessel radius
l: vessel length
h_a: adhesion height
z: adhesion depth
r_a: radius of adhesion
r_{a0}: radius at same depth without adhesion
r_b: radius of vessel back
r_f: radius of vessel front

IMPLEMENTATION

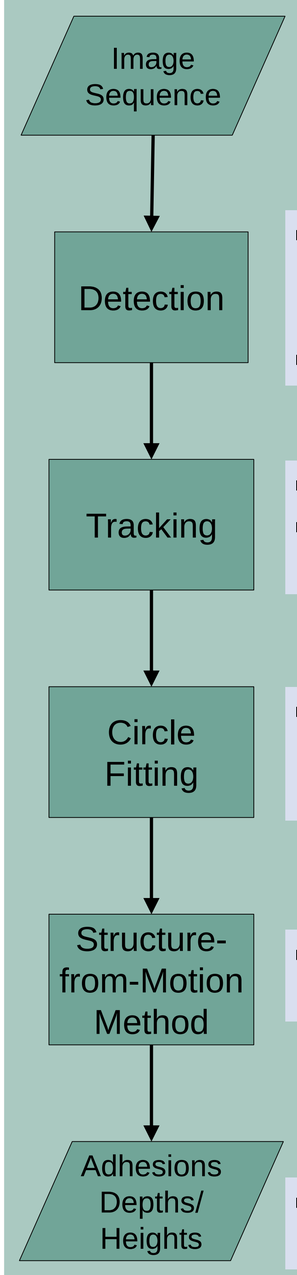

- Feature detection depending on specific task (e.g. SIFT, SURF)
- Feature descriptors

- Feature matching
- Adapted Kalman Filter for each feature point

- Minimizing least squares error to circle model for each track

- Application of SfM method for each track

- Adhesion data for each track

RESULTS AND CONCLUSION

Validation of proposed method based on image data of:

- Experimental setup
- Industrial cement rotary kiln

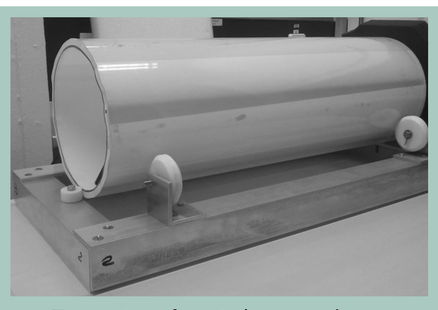

Exp. setup of a rotating vessel

Adhesion dummy w/ tracked positions

	Exp.1		Exp.2		Exp.3	
	H	D	H	D	H	D
Image-based	30.7	77.6	20.5	48.2	28.9	101.1
Real value	30.0	80.0	20.0	50.0	30.0	100.0
Relative error	2.3%	3.0%	2.5%	3.6%	3.7%	1.1%

Comparison of image-based data and real data (H: height, D: depth; units: mm)

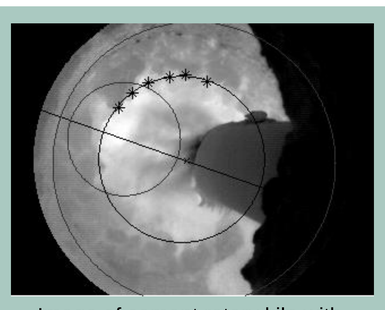

Image of cement rotary kiln with tracked adhesion

Front side circle	$x_{c,f} = 162$ $y_{c,f} = 124$ $r_f = 125$
Back side circle	$x_{m,b} = 100$ $y_{m,b} = 103$ $r_b = 50$
Depth back side circle	$l = 5\,m$
Radius vessel	$r = 1.5\,m$

- Method is capable to measure heights and depths of adhesions inside a rotating vessel
- Allows for early detections of critical adhesions
- Can improve process stability

Future works comprise:

- Improvements in feature detection and tracking in industrial image data
- Usage of constrained ellipse fitting instead of free circle fitting